ETH zürich

The Value of Communication in the Voltage Regulation Problem

Guido Cavraro, Saverio Bolognani, Ruggero Carli, and Sandro Zampieri

University of Padova, Italy
ETH Zurich, Switzerland

Future power distribution grids

- Integration of small-scale distributed generation

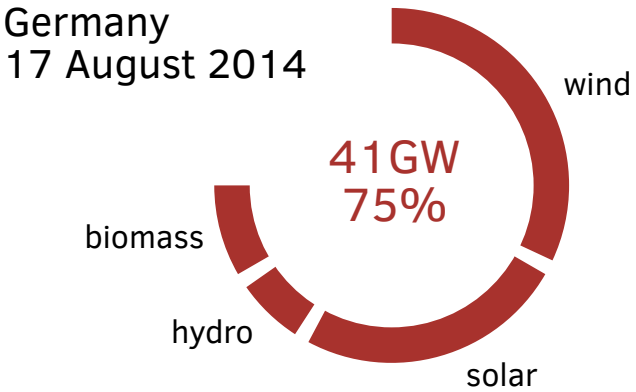

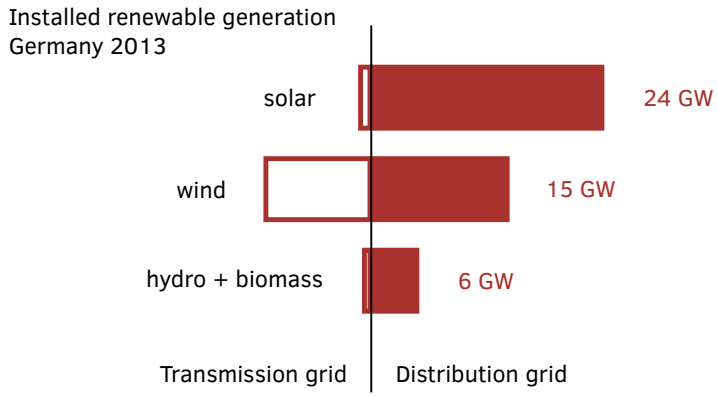

- Electric mobility infrastructure

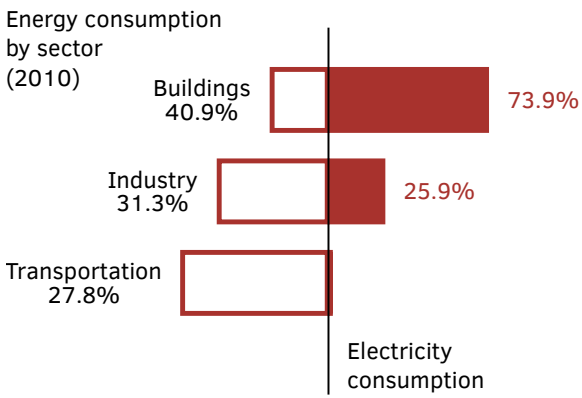

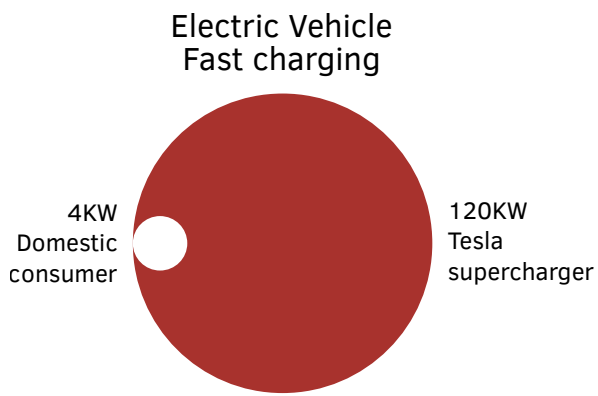

Distribution grid congestion

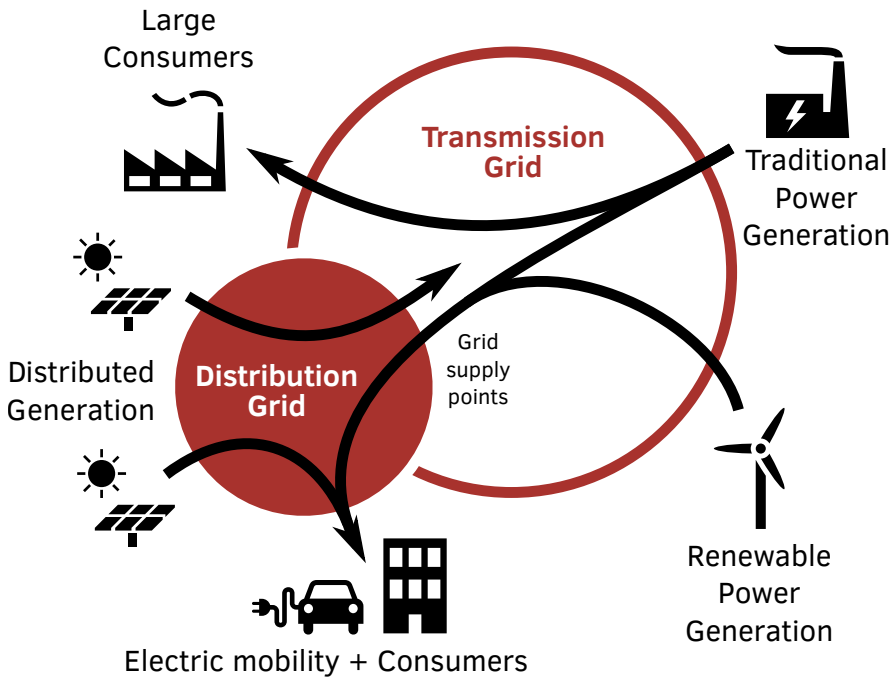

Operation of the grid close or above the **physical limits** / **hosting capacity**

- lower efficiency, reduced quality of service, blackouts
- curtailment of renewable power generation, no electric mobility

From *fit-and-forget* to **virtual reinforcement**:

- measurement (voltage, power, PMUs, . . .)
- control & computation
- actuation (tap changers, reactive power compensation, controllable loads and generators, . . .)

Distributed voltage regulation

v_h voltage magnitude

θ_h voltage angle

p_h active power injection

q_h reactive power injection

Y bus admittance matrix

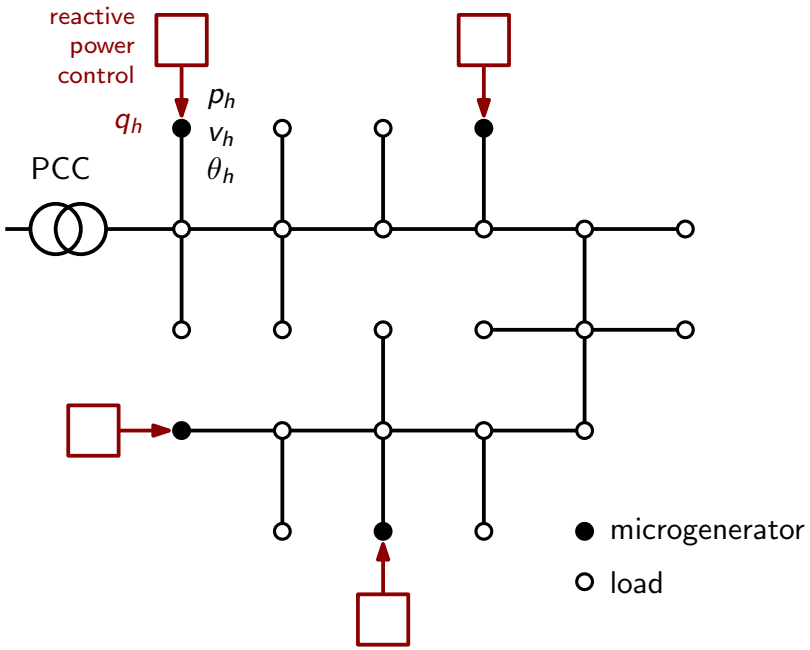

Linearized grid model

$$\begin{bmatrix} \mathrm{Re}(Y) & -\mathrm{Im}(Y) \\ -\mathrm{Im}(Y) & \mathrm{Re}(Y) \end{bmatrix} \begin{bmatrix} v \\ \theta \end{bmatrix} = \begin{bmatrix} p \\ q \end{bmatrix}$$

$$v = \mathbf{1} + \mathrm{Re}(Y^\dagger)p + \mathrm{Im}(Y^\dagger)q$$

Volt/VAR problem

For each generator h, determine

$$q_h \in [q_{\min,h}, q_{\max,h}]$$

such that $\quad v_h \in [v_{\min}, v_{\max}]$

A feedforward approach

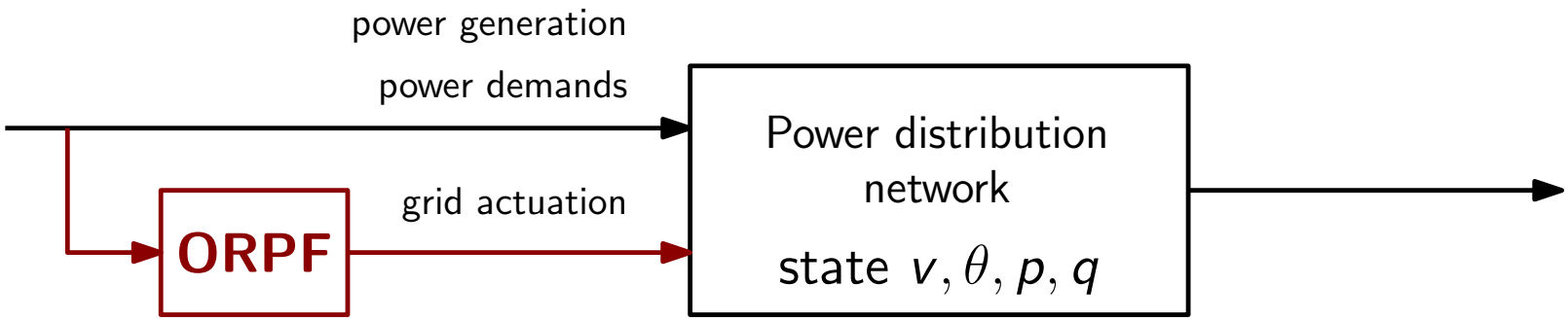

Conventional approach: Optimal Reactive Power Flow

- Similar to power transmission grid OPF
- Motivated by encouraging results on **OPF convexification**
  Lavaei (2012), Farivar (2013), ...
- Requires **full disturbance knowledge** - **full communication**
- Heavily **model based**

Communication-performance trade-off

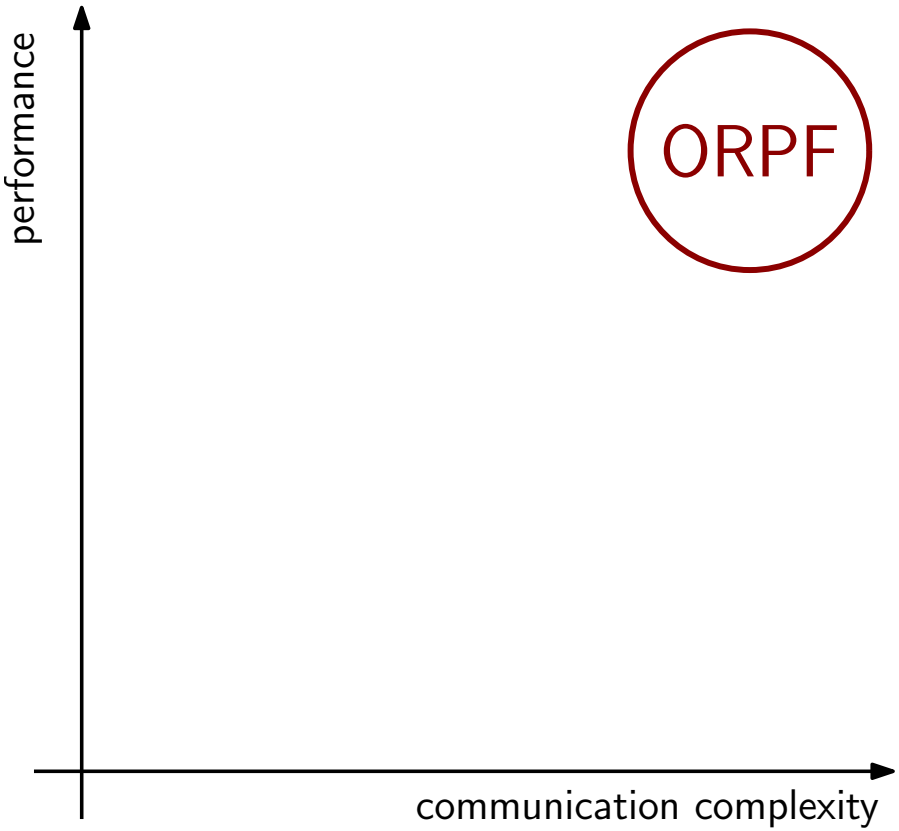

Communication complexity

- *centralized* vs. decentralized
- *long-range* vs. short-range
- *full state* vs. few measurements

Performance

- convergence to
  - a *feasible* solution
  - an *optimal* solution
- tracking performance

How about other strategies? Where are they in this trade-off chart?

Purely local feedback control

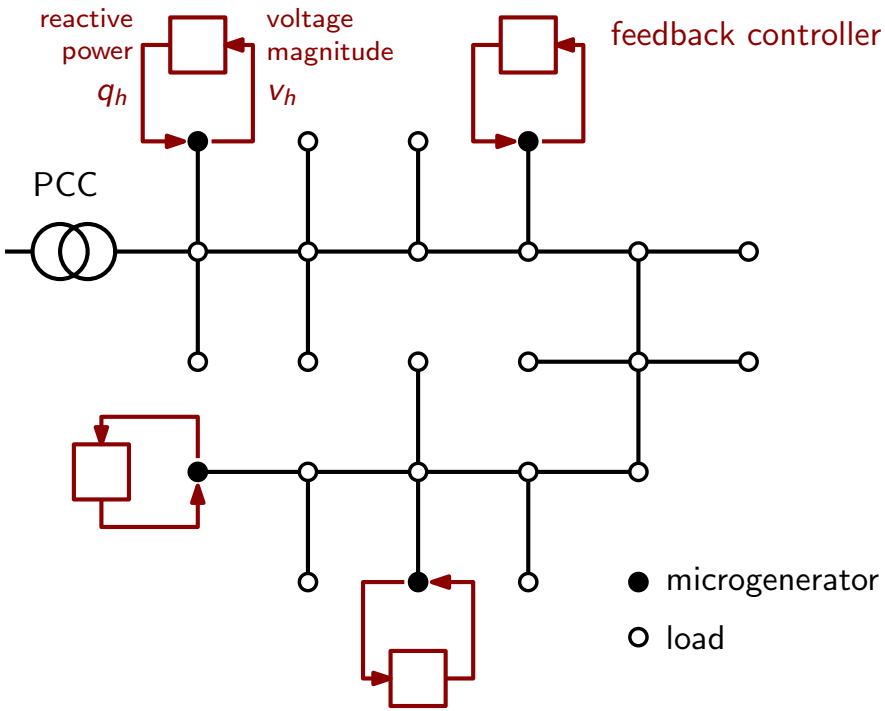

Static and dynamic feedback laws

No communication

- Turitsyn et al. (2011)
- Jahangiri & Aliprantis (2013)
- Cavraro & Carli (2015)
- Farivar, Zhou, & Chen (2015)
- Kundu, Backhaus, & Hiskens (2013)
- Yeh, Gayme, & Low (2012)
- Samadi et al. (2014)
- Kekatos et al. (2015)
- Zhu & Liu (2015)
- Li, Gu, & Dahleh (2014)
- VDE-AR-N 4105 technical req. (2011)
- ENTSO-E Draft network code (2012)
- IEEE P1547.8/D8 (2014)

Purely local feedback control

A class of purely local strategies

$$q_h(t+1) = g_h(q_h(t), v_h(t))$$

where $g_h : [q_{\min}, q_{\max}] \times \mathbb{R}_{\geq 0} \to [q_{\min}, q_{\max}]$ satisfies

1. $g_h(q, v)$ continuous in v for all q
2. $g_h(q, v)$ weakly decreasing in v
3. $g_h(0, 1) = 0$
4. $g_h(q, v) - g_h(q', v) < q - q'$ for all $q > q'$

A wide class, that contains all the strategies mentioned before.

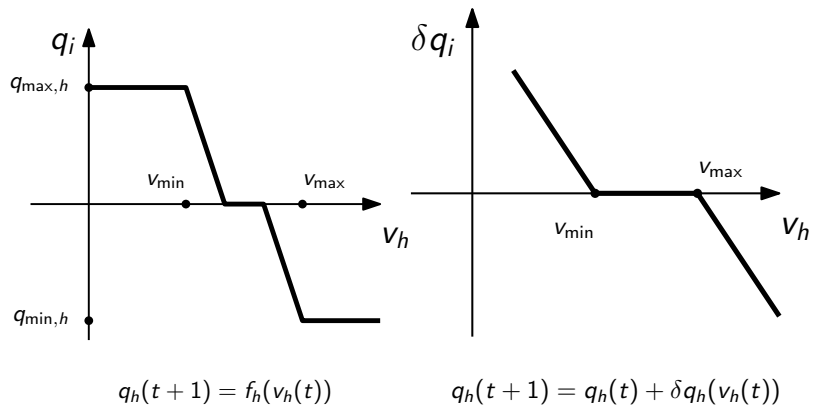

$q_h(t+1) = f_h(v_h(t))$ $\quad$ $q_h(t+1) = q_h(t) + \delta q_h(v_h(t))$

Equilibria of purely local strategies

Individual equilibria - agent *h*

For any v_h^*, there is a unique $q_h^* = F_h(v_h^*)$ which satisfies $q_h^* = g_h(q_h^*, v_h^*)$. Moreover, F_h is a continuous, weakly decreasing function of v_h^*.

The equilibria of the system of interconnected agents are the solutions of

$$q^* = F(v^*) \qquad \textbf{individual agents}$$

$$v^* = Xq^* + b \qquad \textbf{linearized grid equations}$$

Unique system equilibrium

Sandberg & Willson (1969) $\rightarrow$ Existence & uniqueness of sol. of $F(x) + Ax = b$

$\rightarrow$ **There exists a unique equilibrium voltage profile**

$$v^* = XF(v^*) + b$$

A constructive example of suboptimality

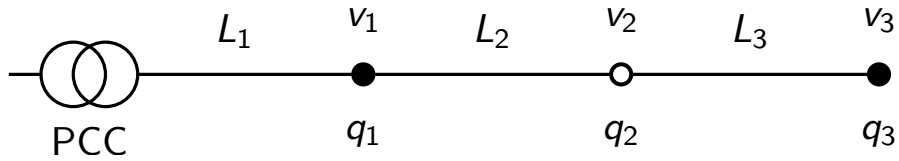

For any value of the grid parameters, there exists a value of

- the reactive power demand q_2 *(large enough)*
- the reactive power limit $q_{\max,3}$ *(small enough)*
- the reactive power limit $q_{\max,1}$ *(small enough)*

such that **the unique equilibrium is unfeasible for all local strategies**

$$(q^*, v^*) \notin [q_{\min}, q_{\max}] \times [v_{\min}, v_{\max}]$$

even if a (non equilibrium) feasible solution exists.

Suboptimality gap

Purely local strategies can fail to achieve a feasible voltage profile.

Simulation results

IEEE 123 test feeder
2 generators
Overvoltage condition

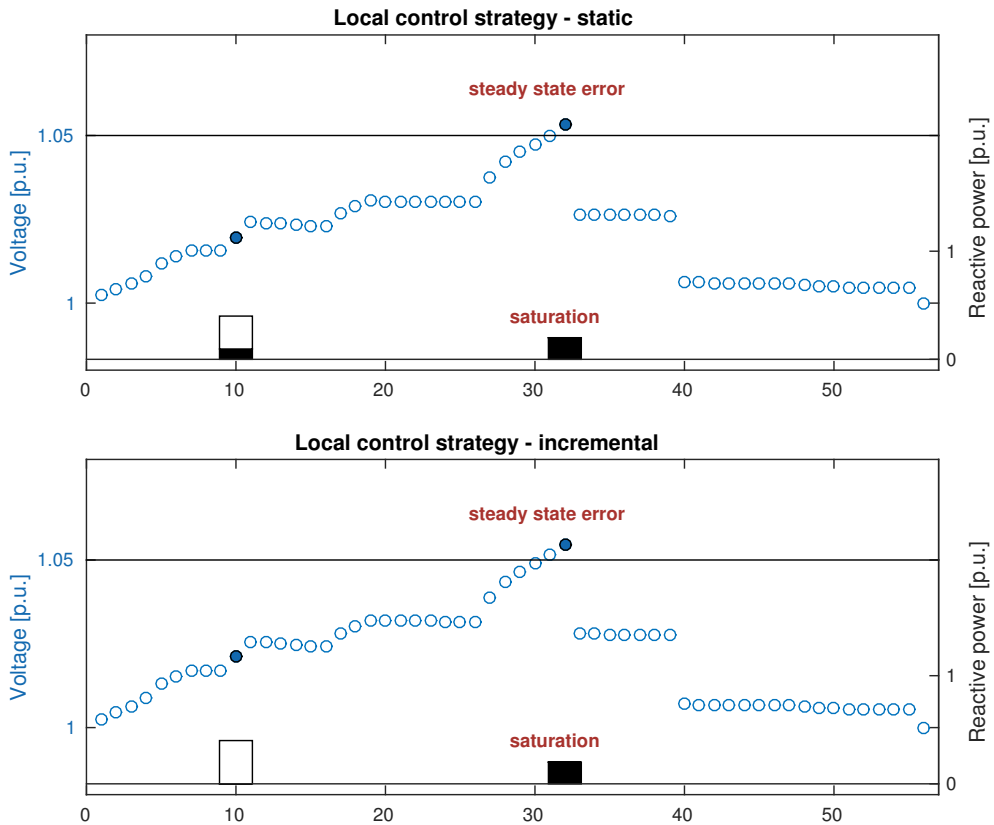

Communication-performance trade-off

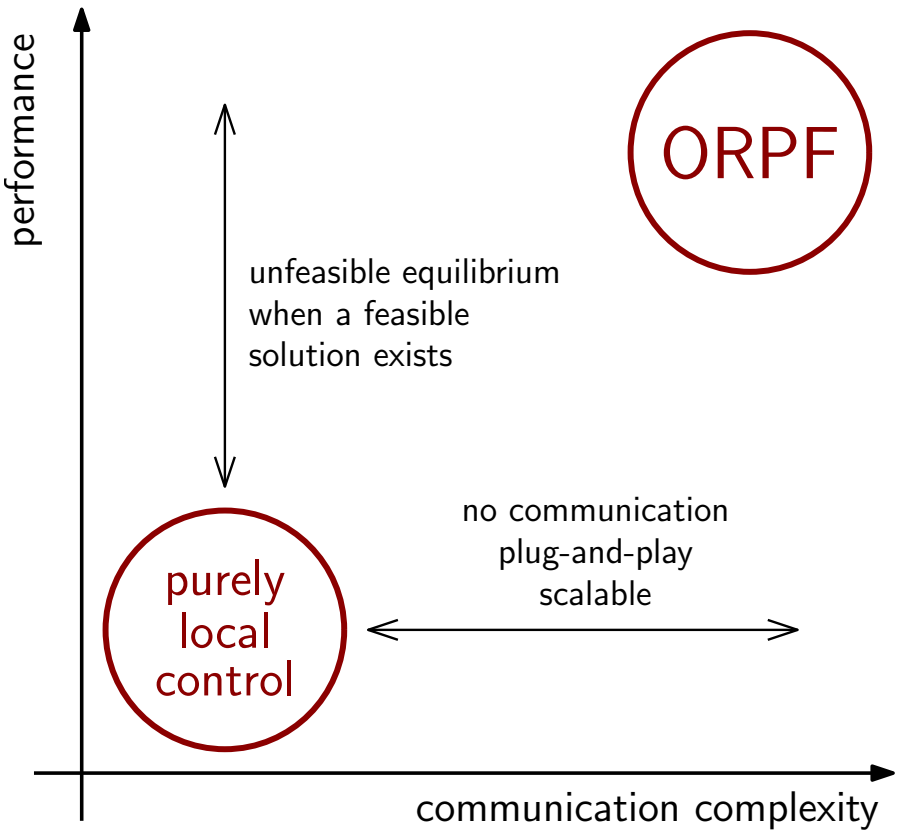

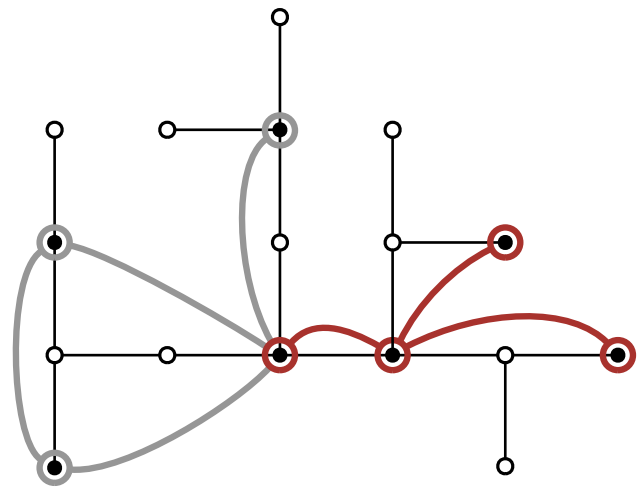

How about a little communication?

Networked feedback control

$$\begin{aligned} \min_{q} \quad & \frac{1}{2} q^T X q \\ \text{subject to} \quad & v_{\min} \leq v_h \leq v_{\max} \\ & q_{\min,h} \leq q_h \leq q_{\max,h} \end{aligned}$$

Lagrangian $\mathcal{L}(q, \lambda, \nu) = \frac{1}{2} q^T X q + \lambda_{\max}^T (v - v_{\max}) + \nu_{\max}^T (q - q_{\max}) + \dots$

Dual ascent flow

- **Primal update** $q \leftarrow \arg\min_q \mathcal{L}(q, \lambda, \nu)$
- **Dual update**

$$\begin{cases} \lambda_{\max} \leftarrow \left[\lambda_{\max} + \gamma \frac{\partial \mathcal{L}}{\partial \lambda_{\max}} \right]_{\geq 0} \\ \nu_{\max} \leftarrow \left[\nu_{\max} + \gamma \frac{\partial \mathcal{L}}{\partial q_{\max}} \right]_{\geq 0} \\ \dots \end{cases}$$

Networked feedback control

Lagrangian $\mathcal{L}(q, \lambda, \nu) = \frac{1}{2} q^T X q + \lambda_{\max}^T (v - v_{\max}) + \nu_{\max}^T (q - q_{\max}) + \dots$

Primal update $q \leftarrow \arg\min_q \mathcal{L}(q, \lambda, \nu)$

$$\frac{\partial \mathcal{L}}{\partial q} = 0 \quad \Rightarrow \quad Xq + \underbrace{\frac{\partial v}{\partial q}}_{X} \lambda_{\max} + \nu_{\max} = 0 \quad \Rightarrow \quad q \leftarrow -\lambda_{\max} - \underbrace{X^{-1}}_{\text{sparse!}} \nu_{\max}$$

Dual update e.g. $\lambda_{\max} \leftarrow \left[\lambda_{\max} + \gamma \frac{\partial \mathcal{L}}{\partial \lambda_{\max}} \right]_{\geq 0}$

$$\frac{\partial \mathcal{L}}{\partial \lambda_{\max}} = v - v_{\max} \quad \Rightarrow \quad \lambda_{\max} \leftarrow [\lambda_{\max} + \gamma (v - v_{\max})]_{\geq 0}$$

Networked feedback control

Synchronous individual agent update

$$\begin{cases} q_h \leftarrow -\lambda_{\max,h} - \sum_k X_{hk}^{-1} \nu_{\max,k} \\ \lambda_{\max,h} \leftarrow \left[\lambda_{\max,h} + \gamma(v_h - v_{\max})\right]_{\geq 0} \\ \nu_{\max,h} \leftarrow \left[\nu_{\max,h} + \gamma(q_h - q_{\max,h})\right]_{\geq 0} \\ \dots \end{cases}$$

- **Distributed** Nearest-neighbor "diffusion" term $-\sum_k X_{hk}^{-1} \nu_{\max,k}$
- **Structure preserving** X_{hk}^{-1} depends on the electric path $h \sim k$
- **Optimal** Asymptotic convergence to the ORPF solution

Simulation results

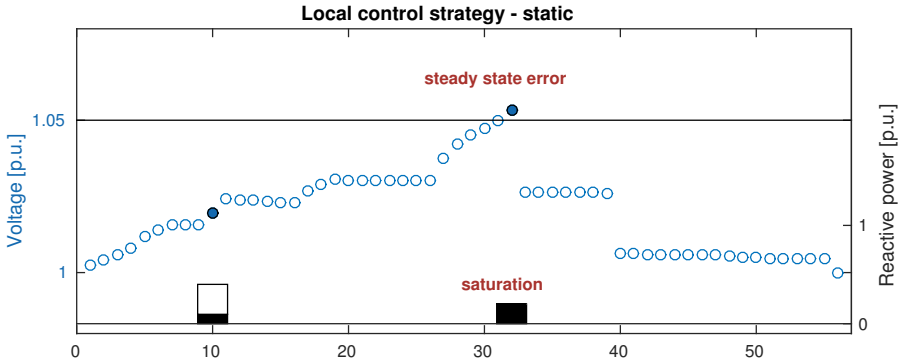

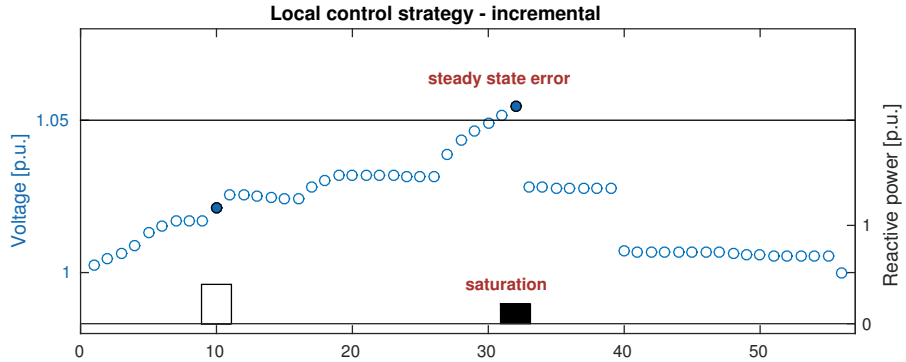

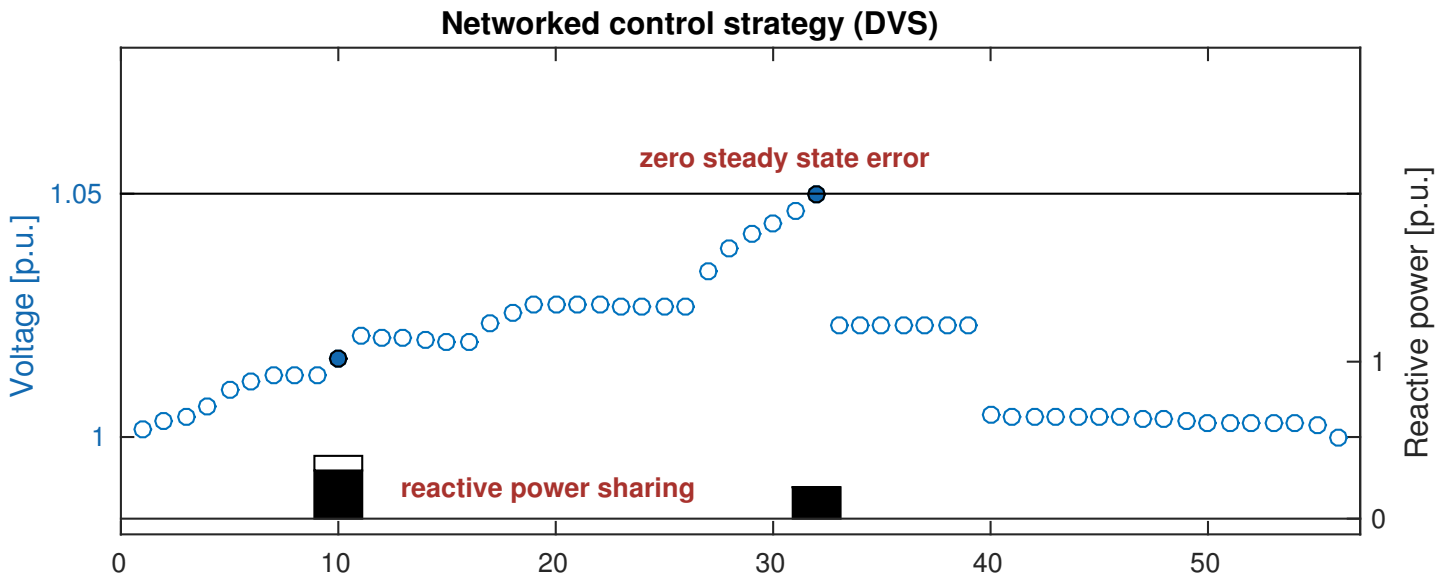

Bolognani & Zampieri (2013), IEEE Trans. Automatic Control **Short-range communication is optimal!**

Olivier, Aristidou, Ernst, & Van Cutsem (2016), IEEE Trans. Smart Grid **1-bit messages are enough!**

Conclusions

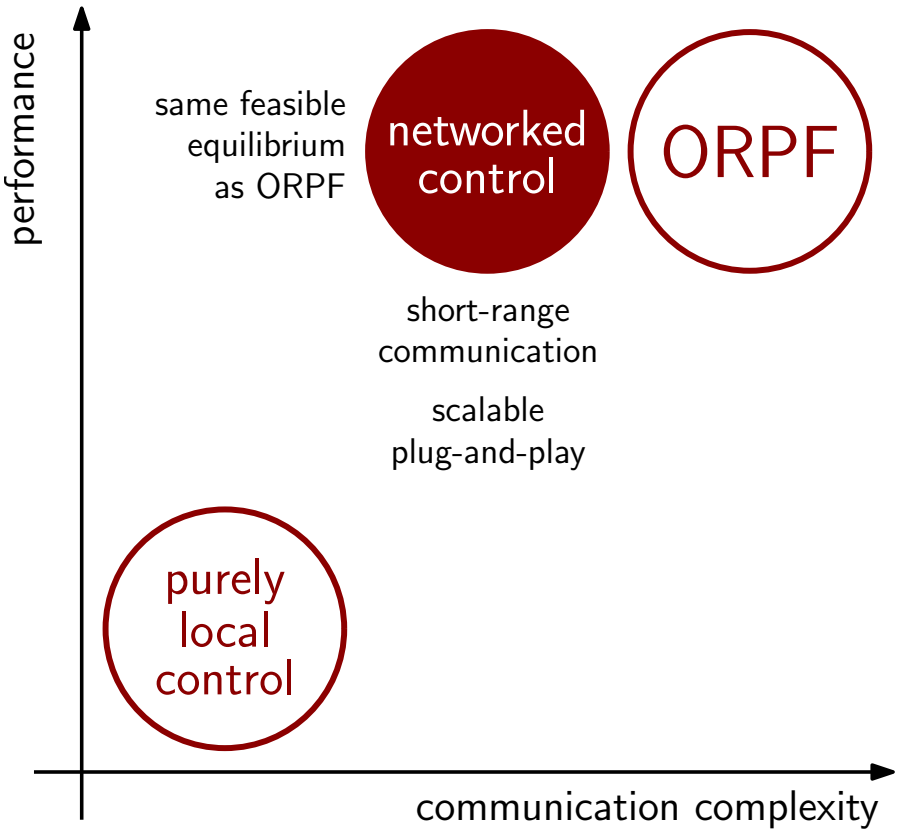

- **Voltage regulation problem** via **reactive power control**
- **All local control strategies** may converge to unfeasible solutions, even if a feasible solution exists
- **Networked control strategies** are able to converge to the optimal feasible solution using only short-range communication
- **Next?**
  - dynamic performance
  - communication specs